UNCLASSIFIED

AD NUMBER
ADA492244
CLASSIFICATION CHANGES
TO: **UNCLASSIFIED**
FROM: **CONFIDENTIAL**
LIMITATION CHANGES
TO: **Approved for public release; distribution is unlimited. Document partially illegible.**
FROM: **Distribution authorized to DoD only; Foreign Government Information; AUG 1950. Other requests shall be referred to British Embassy, 3100 Massachusetts Avenue, NW, Washington, DC 20008. Document partially illegible.**
AUTHORITY
DSTL ltr dtd 16 Feb 2007; DSTL ltr dtd 16 Feb 2007

THIS PAGE IS UNCLASSIFIED

15/50 ~~CONFIDENTIAL~~ COPY No. 48

Gt Britain Ministry of Supply

MINISTRY OF SUPPLY

ARMAMENT RESEARCH ESTABLISHMENT

MEMO No. 15/50

20081208293

WEAPONS RESEARCH DIVISION

PICATINNY ARSENAL LIBRARY
DOVER, N. J.

The Design of a Closed Vessel (No. 21) for routine examination of propellants for guns

H. A. Flint

INV 90

This information is furnished with the understanding that it will not be released to another nation without specific approval of the United Kingdom, Ministry of Supply; that it will not be used for other than military purposes; that individual or corporation rights originating in the information, patented or not, will be respected; and that the information will be afforded substantially the same degree of security as afforded by the United Kingdom, Ministry of Supply.

(48) C 19933

Fort Halstead,
Kent.

August,
1950

~~CONFIDENTIAL~~

This Document was graded
CONFIDENTIAL
at the 33rd meeting of the A.R.E.
Security Classification Committee.

THIS DOCUMENT IS THE PROPERTY OF H.B.M. GOVERNMENT
AND ATTENTION IS CALLED TO THE PENALTIES ATTACHING
TO ANY INFRINGEMENT OF THE OFFICIAL SECRETS ACTS

It is intended for the use of the recipient only, and for communication to such officers under him as may require to be acquainted with its contents in the course of their duties. The officers exercising this power of communication are responsible that such information is imparted with due caution and reserve. Any person other than the authorised holder, upon obtaining possession of this document, by finding or otherwise, should forward it together with his name and address in a closed envelope to :-

THE SECRETARY, MINISTRY OF SUPPLY, ADELPHI, LONDON, W.C. 2.

Letter postage need not be prepaid, other postage will be refunded. All persons are hereby warned that the unauthorised retention or destruction of this document is an offence against the Official Secrets Acts.

A.R.E.
Publishing Section

CONFIDENTIAL

Ministry of Supply

ARMAMENT RESEARCH ESTABLISHMENT

MEMO NO. 15/50

(Weapons Research Memo No. 7/50)

The design of a Closed Vessel (No.21) for routine examination of propellants for guns

H.A. Flint

Summary

A short note on the type of propellant information obtainable from the Closed Vessel technique is followed by a survey of the various vessel designs used in the A.R.E. since about 1895.

The various factors taken into consideration in the design of a vessel (No.21) for routine examination of ordnance propellants, and various modifications which operating experience showed to be desirable, are dealt with next, followed by an account of the method employed for measuring the chamber volume.

In general, this design of vessel has been found to be satisfactory for the required purpose, and no further modifications are anticipated at the present time.

CONFIDENTIAL

DISTRIBUTION LIST

External

Nos. 1 - 47	Ministry of Supply (TPA3/TIB) for distribution overseas, for records and for onward transmission to:-
	C.A.R.D.E., Valcartier, Canada (Attention Major Donaldson)
	C.A.R.D.E., Valcartier, Canada (Attention Mr. E.W. Greenwood)
	DWR(D) for CIME, Kirkee, India.
	Defence Research Laboratories, Maribyrnong, Victoria, Australia (Attention Mr. E. Treharne)
	CSAR, SBR, Woolwich (Attention Mr. J. McHenry of Explosives Factory, Mulwala, Australia)
48 - 52	Ministry of Supply (TPA3/TIB) for BJSM/TS for onward transmission to:-
	Mr. D.R. Cameron, Picatinny Arsenal, Dover, New Jersey, U.S.A.
	Dr. Jones, Ballistic Research Laboratories, Aberdeen Proving Ground, U.S.A.
	Mr. J.R. Lane, Ballistic Research Laboratories, Aberdeen Proving Ground, U.S.A.
	Mr. E. Mitchell, Bureau of Ordnance, Section Re2d, Navy Department, Washington,D.C, U.S.A.
	Mr. J.H. Wiegand, U.S. Naval Ordnance Test Station, U.S.A.
53 - 54	C.S/E.R.D.E.
55 - 61	C.S/E.R.D.E. (Attention SPR. 1, Dr. Hodge, Dr. Lawson, Mr. Lewis, Mr. K.W. Jones, Mr. Trist and Library).
62 - 64	D.W.R.(D)
65 - 67	C.E.A.D.
68 - 70	C.I.A.
71 - 73	C.I.N.O.
74 - 76	C.S.R.
77	D.G of A.
78	D.N.O.
79	M.C. of S.
80	R.N.C.
81 - 83	Sec. O.B.
84 - 85	Supt. R.N.P.F, Caerwent.
86 - 87	Supt. R.O.F., Bishopton.

Internal

88	S.S.W.R.
89	S.B.R.
90 - 92	S.B.R. (Attention Mr. Booth, Mr. H.A. Flint, and Mr. H. Roe)
93 - 94	W.R. Records
95 - 120	Stock

Further copies of this Memo can be obtained from the Chief Information Officer, Armament Research Establishment, Fort Halstead, Sevenoaks, Kent.

CONTENTS

			Page
Section	1.	Introduction	1
"	2.	The design of C.V.21	7
"	3.	Preparation of C.V.21 for firing	11
"	4.	The measurement of vessel volume	15
"	5.	Further developments	17
"	6.	Acknowledgment	18
"	7.	Bibliography	18
Fig.	1.	C.V.21 Assembly	
"	2.	C.V.21 Water Bath	
"	3.	C.V.21 Details	
"	4.	C.V.21 Details	
"	5.	C.V.21 Special spanners and valve cleaning tool	
"	6.	C.V.21 Tool for extracting sealing-rings	
"	7.	C.V.21 Tool for extracting liner	
"	8.	C.V.21 Gauge for measuring chamber length	

1. Introduction

Fundamentally, the accurate prediction of gun ballistics (i.e. muzzle velocity and maximum pressure) became possible through the development, nearly a hundred years ago, of propellants capable of being manufactured with dimensional regularity, and which burn away, in parallel - layer fashion, according to laws which are characteristic of the composition.

In addition to certain physical data, such as shape and ballistic size, the propellant information required for internal ballistic calculation consists of (a) the force constant (i.e. a measure of the energy available per unit mass of propellant), and (b) the rate of burning law.

From the natures and proportions of the various ingredients it is possible to calculate the propellant force constant, usually to an accuracy of within $\pm$ 1%. The calculated force constant is, of course, accurate to this degree only if the stated proportions of the ingredients are accurate also. In practice there will, of course, be departures from the nominal values, but such differences should be small, as they depend on weighings, which can be carried out very accurately. In general, then, the actual force constant of a propellant ought not to differ appreciably from the value calculated from the nominal composition.

In most cases, the propellant burning law may be expressed to a reasonably high degree of accuracy, in the form:-

Rate of burning = βP^{α}; where P is the pressure of the atmosphere surrounding the propellant, and β and α are constants for any particular composition. For the purpose of making routine internal ballistic estimates, this form of burning law is too complicated, and must be simplified to the linear form:-

Rate of burning = $\beta_1 P$.

From the results of gun firings it is possible to deduce the value of β_1 for the propellant employed, but this method is open to objection on grounds of the various assumptions which have to be made in the theoretical treatment and various factors (e.g. wear) associated with the gun. Even if these doubts could be removed, this method would still not give an indication of the true law of burning, βP^{α}. In the case of experimental compositions, it would be unsafe to fire charges in the gun, and it follows that some means of assessing burning characteristics independently of gun firings is essential.

The obvious solution to this requirement is the Closed Vessel, in which a propellant charge is allowed to burn under essentially constant volume conditions, during which time the pressure build-up is studied. By this means many of the uncertainties associated with the gun method are eliminated, and it is possible to obtain a continuous plot of rate of burning against pressure, from which the true burning law βP^{α} may be deduced. At the same time the propellant force constant may be assessed, and this provides a check on the calculated value.

The early designs of Closed Vessel were probably developed for the assessment of propellant force and rate of burning constants for internal ballistic purposes, but there are other applications, mainly in propellant research, as a guide in manufacture, and possibly in propellant inspection and proof.

A Closed Vessel consists essentially of a steel block containing the chamber, which is sealed off by means of blocks fitted with means for preventing the exit of gas during the combustion of the propellant charge. It is necessary to make provision for the ignition of the charge, the measurement of the pressure in the chamber during propellant combustion, and for exhausting the chamber after the completion of burning.

Noble (ref.1) has recorded the early history of the use of Closed Vessels in different countries for propellant investigations, and his own work in England up to about 1900. Sir Andrew Noble was both an Artillery officer and a distinguished scientist, and his work on propellants, in conjunction with Sir Frederick Abel, was sponsored by a Committee on Explosives appointed by the British Service Departments. From this Committee there eventually developed an Experimental Establishment at Woolwich, which, after various changes of name, became part of the present Armament Research Establishment. The Closed Vessel Section of the Ballistics Branch of this Establishment has functioned continuously and maintained records of its work since 1919. The extant records before that date are somewhat scanty; but the system of identifying each individual Closed Vessel design by a consecutive number has been carried on from the vessels which were inherited from the earlier experimenters at Woolwich.

Royal Gun Factory drawing No.67, dated 16.1.1895, shows the design of what must be presumed to be Closed Vessel No.1 (henceforth abbreviated to C.V.1). This was a cylindrical vessel of about 38 cu. ins. capacity, fitted with a firing block at one end and a gauge block at the other. Ignition was effected by electrical fusion of a thin wire bridging the ends of two electrodes, one of which was electrically insulated from the supporting block into which the other one was serewed for earth return. Obturation of the firing block was of the unsupported-area type, as in the B.L. gun, and the obturating pad was probably composed of a mixture of asbestos and mutton fat.

The gauge block obturator consisted of a copper ring L - shaped in cross-section. The gauge itself was of the copper crusher type, and a copper cup, or gas-check, was used to prevent leakage of propellant gases past its piston. The gauge was of the recording type, compression of the copper causing a stylus to be deflected longitudinally across a rotating drum around which had been wrapped a length of smoke-blackened paper, on which a pressure time curve was thus drawn. A timing-fork carrying a stylus was used to apply a trace for time calibration. The gas release valve was carried in a radial boring in the vessel body.

The early history of C.V.2 is somewhat obscure, but it was in use in 1901 (as were C.V.1 and C.V.3) when book records of C.V. firings were commenced. The original chamber capacity of C.V.2 was 28 cu. ins., but it was relined in 1909 and supplied with breech blocks of various lengths so that the volume could be varied in steps from 4 to 38 cu. ins. It was again relined in 1920, three capacities then being allowed for, but these volumes were later changed by various modifications in breech block design. Prior to 1932, when this vessel was taken out of service owing to the development of serious bore cracking, capacities of 8 and 40 cu. ins. were in regular use. In 1937 C.V.2 was sectioned for demonstration purposes.

In its original state, C.V.2 was fitted at one end with a firing block and obturating pad similar in design to that employed in C.V.1. The other end of the vessel carried a recording type of crusher gauge fitting into a gauge block which screwed down on to a copper washer for obturation purposes. Obturation of the gauge piston was effected through a layer of resilient packing material (probably a mixture of asbestos and tallow) sandwiched between the piston head and a short steel plug of the same diameter, the purpose of this plug probably being to protect the packing from the hot cordite gases.

The gas release valve was carried in a radial boring, and its body screwed down on to a copper washer for obturation.

There were no fundamental changes in design until 1923, when the Petavel design of tubular spring manometer for recording pressure-time curves was fitted to this vessel. This type of manometer is free from the inertia effects associated with the copper crusher gauge, and its adoption enabled curves of true pressure against time to be recorded for the first time.

The Petavel manometer was subsequently improved by various modifications in design, and it became very reliable in operation and simple to use. In 1927 a Piezo Electric gauge was designed for and used in C.V.2, but for this vessel the spring manometer remained the standard pressure-measuring instrument.

Little information regarding C.V.3 is available, but it is known that its capacity was 56 cu. ins. The earliest records show that C.Vs.1, 2 and 3 were in regular use in 1901, and some smoked paper records dated 1896, on which the vessel number is not specified, indicate that one or more of these vessels had already been in use for some years.

Another vessel, also known as C.V.3 but quite distinct from the C.V.3 referred to above, was designed in 1903, but very few firings can be traced. A few rounds were fired between 1918 and 1921. This was a small wire-wound vessel of 0.7854 cu. ins. capacity, designed to withstand a maximum pressure of 100 tons per sq. in. It appears that this vessel has been fired successfully at a pressure of 60 tons per sq. in., but the firing-pin obturation failed in conditions designed to produce a maximum pressure of 80 tons per sq. in.

C.V.4., of 56 cu. ins. capacity, was made in 1908, up to which time C.Vs.1, 2 and the first-mentioned 3 had been in regular use. It was evidently designed for comparatively low pressure work, as copper sealing rings were used at all joints. From 1908 until 1923 (i.e. including the 1914-1918 war years) only C.Vs.2 and 4 were in use. C.V.4 was discarded in 1923.

C.V.5, made for low-pressure firings, was in operation from 1919 until 1923, when it was loaned to another section for use in investigations on propellant combustion temperatures.

C.V.6. was a failure, and did not survive the proof firings. The vessel body was of two-piece construction, with the release valve body screwing into the outer jacket only. In the proof firings, propellant gases escaped from the release channel through the joint between the inner and outer tubes, causing considerable damage to the vessel body.

C.V.7., delivered in 1925, was autofrettaged to a pressure of 45 tons per sq. in. Three vessel capacities, viz. 58, 108 and 158 cu. ins., were catered for by the provision of firing blocks of various lengths. This vessel is still in existence, but has not been used since 1936. As in previous designs, the insulated and earth electrodes provided for ignition purposes are carried in one of the end closing blocks. Here again, obturation is of the unsupported-area type, the obturating pad being of resilient material. The other end of the chamber is permanently closed by the gauge block, obturation in this case being by means of a lead washer protected from the propellant gases by a labyrinth. A copper gas-check is used for obturating the tubular spring gauge, which screws into the gauge block. The gas release valve screws into a radial boring in the vessel body, and the obturation here is similar to that used for the firing block.

An unsuccessful design of Piezo Electric gauge was tried out in this vessel in 1928.

A disadvantage of this vessel is the damage it causes to the laboratory in the event of obturation failure when the vessel is operating at its maximum capacity and pressure.

C.V.8. is in the form of a steel cube with a spherical chamber 5 inches in diameter. This vessel was designed to take advantage of the fact that, for a given capacity, the spherical shape of chamber presents the minimum amount of cooling surface to the hot propellant gases contained within it. Separate borings are provided, in different faces of the body, for plugs carrying the firing electrodes, the spring manometer and the gas release valve, and in addition there is a spare boring carrying a blank plug. In all cases, obturation is of the unsupported-area, resilient pad type. This vessel, proved in 1928, has been used only a limited amount.

C.Vs.9 and 10. were proposed for low-pressure investigations, and were to have been dimensionally identical except in length, but only C.V.9 was, in fact, made. C.V.9 was constructed from part of a B.L. 16-inch gun jacket, the chamber being 18.4 inches in diameter and 13 inches long, giving a volume of approximately 3460 cu. ins. Screwed-in end-plates seating on copper washers carried the firing block at one end of the vessel, and the gauge-block and gas release valve at the other end. The pressure gauge, which was of the tubular spring type, was provided with two separate mirror suspension systems for alternative degrees of sensitivity. In this way, full-scale deflection could be made to correspond to pressures of either 2 or 0.8 tons per sq. in.

Many of the early experimental rocket propellants were fired in this vessel.

C.V.11. first came into use in 1934, and was designed for high pressure work, having been autofrettaged to enable it to withstand a maximum operating pressure of 45 tons per sq. in. It has, in fact, been fired successfully at a maximum pressure of 43.5 tons per sq. in. This vessel has undergone several minor modifications, and now has a chamber capacity of approximately 16 cu. ins. As in all previous designs except C.V.8, the vessel body is in the form of a thick steel tube threaded internally at both ends to receive the closing blocks. The firing electrodes are carried in one of the closing blocks, and the pressure gauge screws into the other. There is a radial boring for the gas release valve. The obturating system for the closing blocks is similar to that employed in C.V.21, which will be described later in greater detail.

Several designs of tubular spring manometer have been made for and used in C.V.11.

C.V.12. was a special-purpose vessel with an abnormally high ratio of chamber length/diameter designed to encourage pressure waves. The chamber was about 30 inches long and 1.5 inches in diameter. The two end-blocks, supporting respectively the firing electrodes and the tubular spring gauge, were fitted with copper obturating rings, and the gas release valve was carried in a radial boring in the vessel body. This vessel was made in 1934, and met with early failure due to weakness at the position of the release valve boring.

In 1937, the damaged C.V.12 was cut in halves, and one half was made into a special vessel for a particular Metallurgical Branch investigation. The obturation was modified to the type now employed in C.V.21, and a combined firing and (copper crusher) gauge block was fitted to one end of the vessel. The other end was closed by a block of special design to suit the desired experimental conditions. This special vessel is called C.V.12(a).

The design of C.V.13 was unusual in that the release valve was carried in an eccentric ring fitting over the vessel body. Obturation of the valve body was provided by a perforated lens-shaped steel ring located between the inner end of the valve body and a flat surface machined on the vessel. The perforation in the lens ring was merely a continuation of the gas escape channel in the vessel body.

The vessel capacity was approximately 35 cu. ins. As before, the firing electrodes were fitted to one of the end-blocks, and the other block carried the gauge. In the original design, one of the blocks was obturated by a lens-ring, and the other by a ring of the type now used in C.V.21. The lens-ring seal was later modified, and the two ends of the vessel were made uniform with regard to the method of obturation.

C.V.13. was made in 1935, being designed for a maximum pressure of about 24 tons per sq. in. By mischance it was slightly overstrained by a firing at 26 tons per sq. in., following which it was given a low-temperature heat treatment to restore its stability.

Several designs of tubular spring gauge and a Piezo Electric gauge have been made for this vessel.

Serial number 14 was reserved for a special design of vessel, the need for which did not materialize.

C.Vs.15 and 16 were designed and made in 1938 as low-pressure vented vessels for use in the investigation of solid propellants for rockets. These two vessels differed only in length; in both cases, the chamber diameter was 5 inches, the capacity of C.V.16, viz. approximately 470 cu. ins., being about double that of C.V.15.

The body consisted of a steel tube threaded internally at both ends. One end received the combined firing, gauge and release-valve block, and nozzles of various diameters could be fitted to the block which screwed into the other end. A resistance gauge was usually employed for pressure measurement, but provision was made for the use of a Crosby engine indicator as an alternative arrangement. Both blocks screwed down on to flat copper washers for sealing purposes.

These vessels are capable of withstanding a maximum pressure of 5 tons per sq. in., but in practice rocket pressures are usually considerably below this figure. Most of the firings carried out in this vessel have been at pressures lower than two tons per sq. in.

C.Vs.17 and 18 also were designed, in 1940, as low-pressure vented vessels for research on solid propellants for rockets. These two vessels also are similar in design, the difference again being in the lengths. C.V.17 was designed for the investigation of propellant erosive burning, and the charge is the standard size of stick for the 3-inch rocket. In this design the tubular steel body is threaded externally at the ends to receive the various fittings which were made from time to time to suit various requirements. Copper rings again form the gas seal, and both the resistor gauge and the Crosby engine indicator have been used for pressure measurement. The chamber is 3.25 ins. in diameter and 45 ins. long.

The chamber of C.V.18 is only 12 ins. in length.

C.V.19 is a shortened version of C.V.13, made in 1941. Thus, all the fittings of C.V.13 fit C.V.19, which has been used mainly as a vented vessel operating at a maximum pressure of about 10 tons per sq. in.

The C.V.20 design was suggested, in 1942, for use in the salting of copper crusher gauges. The large increase in gun firings for gun and propellant proof purposes during the 1939-1945 war called for a large number of copper crusher gauges, and it was anticipated that the salting process might impose a bottleneck in the supply of sufficient numbers of seasoned gauges. It was suggested that the salting of gauges might be carried out more quickly and more economically by firings in a special Closed Vessel, but this suggestion was not, in fact, adopted, and C.V.20 was not made.

The design provided for a chamber of 550 cu. ins. capacity, a gas release valve fitting a radial boring in the vessel body, and firing electrodes carried in one of the closing blocks. Obturation in all cases was to have been by means of brass rings as in C.V.21.

The original design of C.V.21 was produced in 1942 to meet the growing requirement for a Closed Vessel suitable for routine purposes.

It should be mentioned here that from 1923 until early 1941 the tubular spring type of manometer had been used almost exclusively in Closed Vessel recordings. In 1941, however, it became necessary to find alternative laboratory accommodation, due to enemy action. The spring-gauge set-up requires a relatively large amount of floor area per vessel, and as the accommodation available was somewhat limited it was decided to change over to Piezo Electric recording, sufficient space for a Closed Vessel being free in close proximity to a Piezo Electric pressure-time recorder which had at that time been recently installed for the recording of gun phenomena. Accordingly, Piezo Electric gauges were fitted to C.Vs.11 and 13, and it was possible to resume firings after only a short delay.

These firing arrangements were regarded as being temporary only, it being appreciated that, with the passage of time, the Piezo Electric recorder would be required to an increasing extent for the purpose for which it was installed, leaving it free to a diminishing extent for Closed Vessel recordings. At the same time the demand for Closed Vessel firings was increasing, and it soon became apparent that more permanent arrangements would have to be made. As a first step, the rebuilding of the Closed Vessel laboratory was put in hand.

At that time there was some discussion of the possibility of conducting propellant proof in the Closed Vessel, the economic aspects of which are very attractive. In considering the instrumentation required for such large-scale Closed Vessel firings, the Piezo Electric method of pressure measurement has several advantages over the mechanical type of gauge. A necessary step in deducing the propellant rate of burning from a Closed Vessel pressure-time curve is the differentiation of the curve, a somewhat tedious process of limited accuracy. In Piezo Electric recording, however, the differentation may be performed electrically, with an appreciable saving in time and a considerable increase in accuracy. Also, with the mechanical gauge a complete set of recording equipment is necessary for each vessel, whereas with Piezo Electric recording a single recorder will serve a battery of vessels. In 1942 contract action was taken for the provision of a special design of Piezo Electric recorder for Closed Vessel use (Ref. 2). Apart from questions of accuracy, the main considerations in the design of this equipment, which was required to record in terms of dP/dt against pressure, were the ease and rapidity of recording.

For use with the new recording equipment a new design of Closed Vessel, No.21, suitable for routine firings, was prepared, and a battery of vessels to this design was ordered.

Meanwhile, pressure of gun work made it impossible for a sufficient proportion of the operating time of the Piezo Electric pressure-time recorder to be devoted to Closed Vessel work, and it became necessary to make alternative arrangements before the arrival of the new Closed Vessel equipment. Fortunately, at about this time it became possible to return to the rebuilt Closed Vessel laboratory, where firings with C.Vs.11 and 13 were resumed using a rather inferior Piezo Electric pressure-time recorder. In due course the battery of special Closed Vessels (No.21) were delivered, but there was considerable delay in the development of the special recorder, during which time it was necessary to continue with the pressure-time apparatus.

2. The design of C.V.21

Prior to 1939, the major effort of the Closed Vessel Section had been devoted to work closely related to pure research on solid propellants. With the outbreak of war, and as the war continued, it was natural that increasing emphasis should be placed on work of more immediate practical application. It thus became necessary, as explained in the introduction, to arrange for the development of a special recording equipment designed to be suitable for use with a special design of vessel, C.V.21.

The first step, then, was to design the vessel; but before this could be done an analysis of the various factors involved in converting data from Closed Vessel firings into a form suitable for use in internal ballistic calculation was undertaken (Ref.3). This analysis showed that, for a maximum true pressure in the gun of 24 tons per sq. in. - a good average figure - the corresponding Closed Vessel firings should be carried out at about 18 tons per sq. in. maximum pressure. For the hotter propellants such as H.S.C., H.W., and H.N., a charge loaded in a C.V. to a density (Δ) of 0.2 grams per c.c.(i.e. 0.2 grams of charge per c.c. of vessel volume) will produce a maximum pressure of this order. Thus, C.V.21 was designed to withstand a maximum pressure of 18 tons per sq. in., and the standard loading density of 0.2 grams per c.c. was adopted. At this loading density, propellants cooler than those mentioned above will, of course, produce maximum pressures less than 18 tons per sq. in. In the extreme case of a propellant with an adiabatic flame temperature of 1700°K, the maximum pressure at Δ 0.2 is less than 12 tons per sq. in. For cool propellants it is therefore preferred to increase Δ to 0.25, and for this purpose a propellant is considered to be cool if its adiabatic flame temperature is less than,say, 2200°K.

Having decided on the design pressure, the next important consideration was the chamber volume. An important criticism of the C.V. technique lies in the smallness of the propellant charge. It is frequently argued that, due to stick to stick differences within a propellant, resulting from the fact that such a lot is a blend of a number of batches, a large sampling error will arise when a small charge is selected for C.V. firings. The aim, then, in deciding on the capacity for C.V.21 was to make the charge and therefore the vessel volume as large as possible. In this respect various practical limitations arise, the most important being that of safety. Experience with the large-capacity C.V.7 had been that, in the event of some failure in an obturating system, considerable damage to the laboratory could occur. As an occasional failure appears to be inevitable, it was considered that a capacity of about 40 cu. ins. would be suitable on grounds of safety, and at the same time would lead to a vessel of convenient operating size.

In order to minimize the building up of wave pressures and the heat lost by conduction to the vessel walls, a long chamber of small diameter is to be avoided. A chamber length to diameter ratio of about 2:1 was decided on, and the diameter was therefore fixed at 3 inches and the length at 6 inches. The vessel volume is therefore 42.5 cu. ins., or about 700 c.cs., the charge weight corresponding to a Δ of 0.2 being 140 grams.

That a considerable sampling error can occur even with this size of propellant charge can be seen from recent results for a sample of propellant N/2P/M made for the Q.F.3.7 inch MK.6 gun. From the measurements of a number of granules, the standard deviation in web size (D) from grain to grain was 6%. For a C.V. charge of 140 grams the standard deviation of mean D was 0.64%, compared with 0.09% for the gun charge, which weighed 17 lbs. Thus, grain to grain differences in web size would have a much greater effect in the C.V. than in the gun. In spite of this, however, the round to round differences in measured gun ballistics were significantly greater than those corresponding to the C.V. results, indicating that there were sources of error peculiar to the gun.

In respect of C.V. sampling error, it would appear that granular propellant is inferior to stick propellant. The multiperforated shape, requiring a number of fragile pins in the extrusion die, appears to be more difficult to manufacture to a high degree of dimensional accuracy than are single tube, slotted tube and cord, the dies for which are more robust. In the case of granular propellants, the ratio between the sampling errors associated with the gun charge and the C.V. charge is connected with the ratio of the charge weights, as the grain length is the same in the two cases. For stick charges, however, the relevant quantity is the ratio of the numbers of sticks, and as the stick length is usually considerably less in the C.V. than in the gun, this reacts in favour of the long stick. Taking as an example the Q.F.4-in. MK.16 gun firing a 10 lb. 12 oz. charge of slotted-tube propellant MNF/S. 164-048, the propellant stick length is 29.5 ins. compared with the C.V. charge length of 5 ins. Thus, there are approximately 316 propellant sticks in the gun charge, and 54 sticks in the C.V. charge. If the standard deviation in propellant size from stick to stick is x%, then the standard deviation in mean propellant size is $\frac{x}{\sqrt{316}}$ % for the gun charge, and $\frac{x}{\sqrt{54}}$ % for the C.V. charge. Thus, the standard deviations from round to round due to variations in propellant size are 2.42 times as great in the C.V. as in the gun for stick propellant in this instance. For granular propellant, however, the corresponding figure would be $\sqrt{\frac{\text{gun charge weight}}{\text{C.V. charge weight}}} = 5.9$. In addition, the slotted-tube would probably be less variable dimensionally than the multiperforated granular propellant.

The next step in design, after having decided on the chamber dimensions, was to select a suitable external diameter for the vessel body. For this purpose it is necessary to consider the stress distribution in a thick steel cylinder subjected to internal pressure, and to adopt some criterion for the inception of elastic failure. This subject is dealt with in the many text-books on the strength of materials, and the four main theories are well known. As the C.V. is not intended to be mobile, weight considerations are not of major importance, and the vessel can be made excessively strong. According to the maximum shear criterion of elastic failure, which probably under-assesses the vessel strength, the permissible internal pressure (P) is given by:-

$$P = \frac{Y}{2}\left(1 - \frac{1}{R^2}\right)$$

when Y is the yield strength of the steel, and R is the ratio of external/internal diameter.

Little advantage is to be gained by making R greater than 4. In the present case, an external diameter of $7\frac{1}{2}$ ins. was selected, and R therefore equals 2.5. The material chosen was a $3\frac{1}{2}$% nickel steel heat-treated to a minimum yield of 45 tons per sq. in., and the maximum permissible internal pressure is therefore nearly 19 tons per sq. in.

In the light of operating experience, several modifications in the design have been made since it was first produced, and the present design is shown in Fig. 1. Originally the vessel body was of monoblock construction, but difficulty was experienced due to the early formation of bore cracks, which in some cases extended to obturating surfaces and caused blow-outs to occur. It would appear that nickel steel is particularly susceptible to cracking of this type. This trouble was overcome by boring out the vessels and fitting liners of nickel-chromium-molybdenum steel heat-treated to a yield of 55 tons per sq. in.

Much thought had been given to the method of obturating the two closing blocks. The resilient form of unsupported-area seal was not liked because of the increase in chamber resulting from the compression of the obturator pad under pressure. Even if the relationship between pressure and the consequent compression of the obturator pad is known, the correction for this effect in the final analysis of results is an undesirable complication. In the past, various less resilient forms of obturation than this had been tried, starting with the familiar lens-ring seal, which had a limited amount of success. The wave-ring type of joint (covered by Messrs. Imperial Chemical Industries Ltd. Patent No. 397,966) had been considered, but was thought to be more suitable for a permanent joint than for one required to be made and broken at frequent intervals. This method of obturation derives its name from the contour of the outer surface of the sealing ring, which makes nearly line contact with the two surfaces where the seal is required. As an interference fit is necessary, high-grade machining is essential, and plastic flow at the contacting surfaces is inevitable at high pressure. It was considered that any form of seal which caused plastic flow of obturation seatings was undesirable, as, with repeated making and breaking of the joint, repair of such surfaces would inevitably be required, perhaps at fairly regular intervals, and this would be difficult as well as being a nuisance.

A considerable amount of success had been obtained with a variant of the wave-ring viz. a ring of rectangular cross-section. This form of seal had, in fact, been used in C.Vs.11, 12(a), 13 and 19. In the first design the ring had been made of mild steel, but brass had later been found to be more suitable for this purpose. It was decided to use this type of seal in C.V.21, and the actual design employed can be seen in Fig.1. The outer surface of the brass ring is grooved to reduce the amount of surface area in contact with the steel mating surfaces. Any plastic flow of metal at the joint is confined to the brass ring, which may be replaced when worn out. The initial length of the ring is such that, when first fitted, a gap of about 0.05-in. exists between the end of the block and the adjacent end of the liner. At each insertion of the block into the vessel, the ring is over-compressed in an axial direction as the spanner used for screwing in the block is finally tapped with a hammer to make the joint. Thus, in time, the clearance between the end-face of the block and the end of the liner decreases until these surfaces are in contact, at which stage the ring is removed and a new one is fitted in its place. On an average, a set of rings lasts for 30 or 40 rounds.

The vessel volume decreases slightly from round to round due to the progressive compression of the obturating rings. In order to allow for this, before a round is fired a line engraved at each end of the vessel is referred to a scale on the end of the corresponding block, the divisions of the scale being at an angular distance apart such that rotation of the block through this angle causes a variation of one cubic cm. in vessel volume.

One of the closing blocks carries the Piezo Electric gauge, which consists of a cylinder of gem-quality tourmaline, approximately 1/2-inch in diameter and 1/4-inch long, cemented into the head of an electrode which is insulated electrically from the block. The electrode head seats on a mica washer, and the insulation for the stem taken the form of a tube of ebonite or any other type of suitable insulating material. The group assembly is carried in an adaptor which is an interference fit in the gauge body. As a safeguard against non-effectiveness of this fit, the adaptor is made to seat on a copper washer as a precaution against gas leakage. The purpose of the adaptor is to facilitate repair in the event of failure of the electrode obturation. Such failures inevitably lead to melting of the steel surfaces following the rapid flow over them of the propellant gases, which are at a temperature considerably higher than that at which steel melts. Gas-washed steel surfaces are usually glass-hard and therefore very difficult, if not impossible, to machine; but with the method of construction adopted here, the vessel is out of use only for the short time taken to knock out the adaptor and fit a spare.

A spring steel strip, screwed by two screws to the chamber-end of the adaptor, is in contact with a brass cap which in turn is cemented to the tourmaline crystal. Thus, the negative electric charge developed by the crystal on the application of pressure is led to earth by the spring strip, and the positive charge is taken off by the insulated electrode, which is connected to the recording equipment. A second terminal, screwed directly into the gauge block, is provided for earth return.

The other end of the vessel is fitted with a block carrying the ignition electrodes and the gas release valve. One of the firing electrodes is insulated from the block in a manner similar to that employed for the gauge electrode. The firing electrode, also, is contained in an adaptor, for the reasons given above. The earth electrode screws directly into the block.

The gas release valve is of the conical screw-down type, the spindle fitting into a body which screws down on to a copper washer for obturation. In the event of failure of the valve seating, little time is lost in the replacement of the unit, as an adequate supply of spares is kept. One point worthy of mention here is that in the past some trouble with release valves had been experienced due to dirt on the seatings, in spite of careful cleaning. Imperfections in seating inevitably lead to the early destruction of the valve, and perhaps to other damage also. It seems important, therefore, that the area of the seating should be as small as possible, and in the present design the channel leading from the vessel chamber to the valve seating is only 1/16 inch in diameter. The conical end of the spindle is hardened so that any plastic flow at the contacting surfaces is confined to the valve body. The valve spindle is fitted with a gland to permit the evacuation of the chamber, if required.

For accurate and rigid location of the sealing rings, both blocks have two parallel portions, one at either end of the screw thread, which fit parallel portions of the vessel body.

In the design of a Closed Vessel, long narrow channels of any appreciable volume leading off from the main chamber are to be avoided. During the burning of the propellant charge, such channels, of course, become filled with propellant gases, which cool much more rapidly than in the main chamber, due to the greater amount of cooling surface per unit mass of gas. The effective volume of such channels may therefore be many times greater than their physical volume. In C.V.21, the only channel of this type is that between the chamber and the release-valve seating, and its volume is less than 0.5 c.c.

As propellant rate of burning is sensitive to charge temperature, often to the extent of 2% for 10°F difference, it is essential that the charge temperature at the instant of firing be known fairly accurately. With previous designs of vessel, it was the usual practice to incubate the charge at the standard firing temperature of 80°F for some 24 hours before firing, and to load and fire the vessel as quickly as possible to minimize heat transfer from the charge to the vessel wall. In some cases it had been necessary to fire at the ambient temperature, and to correct the results, by semi-empirical methods, to the standard temperature. With some of the vessel designs, temperature conditioning of the vessel body would have been difficult because of the large wall thickness. Temperature control of the vessel as well as of the charge is, of course, desirable, and this factor was given some weight in the present design when the question of wall thickness was considered. The final choice of vessel dimensions made temperature conditioning a practical proposition, and an appropriate design of water-bath was developed. This is shown in Fig. 2, and consists merely of a sheet metal box of such dimensions that it encloses most of the vessel body. The box is provided with hot and cold water supplies, over-flow and drain pipes, and a detachable lid fitted with a thermometer well. The water-bath is supported on steel channels, which in turn are supported on a concrete block through foundation bolts.

Details of the vessel are shown in Figs. 3 and 4. Fig. 5 is a drawing of spanners and a tool used for cleaning release-valve seatings. Fig. 6 shows a tool for extracting worn-out sealing rings for the vessel blocks, and a holder for inserting and extracting vessel liners is shown in Fig. 7.

3. Preparation of C.V.21 for firing

It is assumed that the charge has been weighed out and that it has been kept at the standard firing temperature of 80°F for at least 24 hours.

In order to obtain satisfactory sealing, it is necessary to observe certain precautions. It is, for example, a matter of some importance to close the ends of the vessel in the correct order. From Fig. 1 it will be noticed that the vessel liner is not of uniform diameter externally, but is stepped near one end. For the insertion of the first block, it is important to select that end of the vessel at which the external diameter is the greater, so that the step on the liner comes up against the corresponding step in the bore of the vessel body when the block is screwed home. It has been found that if the reverse procedure is adopted the life of the obturating ring is considerably reduced, due, perhaps, to impairment of the effectiveness of the seal by longitudinal vibrations of the liner.

After firing a round, it is usually found that the sealing rings are retained in the blocks. Before fitting a new ring to the block, the ring is thoroughly cleaned with liquid metal polish and the seating in the block is cleaned in a similar manner, particular care being taken to remove any dirt in the corners, for which purpose a pointed stick covered with cotton wool is used. One end of the cleaned ring is then lightly smeared with a putty-like substance such as plasticine, and this end is then inserted into the recess in the block. If the ring is a tight fit it may require some persuasion with a light hammer, but in such cases it is necessary to protect the ring from mechanical damage. Also, it is advisable to fill the recess in the block with plasticine to prevent dirt from finding its way on to the seating during the tapping process.

After fitting the ring to the block, the annular clearance between the block and the inner surface of the ring is filled with plasticine up to the level of the block face. If necessary, the protruding portion of the ring is again cleaned, and the exposed end of the ring is lightly smeared with plasticine. The sealing ring recess in the vessel liner is cleaned with metal polish on cotton wool before the block is inserted. If the new ring is a tight fit in the liner seating, some considerable effort may be required to screw the block home, but the fit usually becomes easier after firing a round or two.

It sometimes happens that when the blocks are unscrewed after firing, one or both of the obturating rings are left behind in the liner. In such cases there is usually no sign of any failure to obturate, and firing may be continued without removing the ring from the liner. It is then necessary to follow a slightly modified technique. First, the annular seating in the block is thoroughly cleaned, as before, and an estimate is made of the amount of plasticine required to fill the annular clearance between ring and block when fitted together. This amount of plasticine is then rolled into thin cylinders, which are pressed into the inner corner of the recess in the block. A spatula is used to spread the plasticine in an even layer over the inner wall of the recess, the exposed surfaces of the sealing-ring in the liner are thoroughly cleaned in the usual manner, and the block may then be inserted into the vessel.

The main objection to the seizure of a sealing ring in the liner is the subsequent risk of failure to obturate at the end exposed to propellant gases. The comparatively rare failures invariably occur at this end of the ring, the other end being protected by the plasticine in the annular clearance. When the ring sticks in the liner it becomes impossible to clean the vulnerable end between rounds, and there is thus an increased risk of failure. When the ring is ultimately removed from the liner, usually at the end of its useful life, it is necessary to remove the accumulation of dirt on the liner seating with fine emery cloth (e.g. grade 00) followed by a final clean with metal polish.

It would, of course, be possible to ensure that the sealing ring is retained in the block by slightly tapering the two seatings, in such a manner that it is dovetailed in the block and its extraction from the liner is eased.

In normal circumstances, i.e. when the sealing ring is retained in the block, there is no need to remove the ring from the block for cleaning purposes. The ring is removed only at the end of its useful life, and it is then necessary to clean the seating in the block with fine (grade 00) emery cloth, followed by cleaning with metal polish.

The sealing rings are rejected for further use when either (a) the original clearance of 0.05-in. between the chamber-end of the block and the opposite end-face of the liner is completely taken up, or (b) a smooth continuous groove appears across the end-face of the ring, usually at the end that fits into the liner. The formation of such a groove indicates an escape of gas sufficient to melt the ring, and further firing with a ring in this condition is apt to be disastrous to both ring and liner. A ring which has become scored in this manner must be rejected immediately, and the liner seating should be inspected for corresponding damage. Because of the difference in melting temperatures, it is possible for the ring to become scored in this manner without corresponding damage to the liner, but if firing is continued in these circumstances the damage rapidly becomes worse, and scoring of the seating in the liner is certain to occur. It is seldom worth while retaining in service a liner with damaged ring seatings; even if the damage is slight when first observed the liner will deteriorate rapidly, with a high consumption of sealing rings and a strong possibility of a serious failure causing damage to the screw threads.

In extreme cases, failure of the obturation results in molten brass from the sealing ring being forced by the propellant gases along the screw-thread and between the liner and vessel body. When this occurs it is usually necessary to machine the block out of the vessel body, and to use hydraulic pressure to remove the liner. On one occasion extraction of the liner required a load of 80 tons.

When the sealing-ring remains in the liner after the firing of a round the inner end of the ring can not, of course, be examined for evidence of failure to seal. However, if failure has occurred evidence of this is provided by the formation of a sooty deposit, streaked with brass in severe cases, on the end-face of the block and/or liner. When the sealing ring is retained in the block, failure to obturate at the hidden end rarely occurs, but the evidence of failure is the same as above.

In spite of the precautions taken in cleaning the mating surfaces, it sometimes happens that some foreign material, such as a piece of grit, becomes trapped between the end of the ring and the face of the seating. When the block is screwed down tightly the trapped material becomes embedded in the brass, which is, of course, softer than the steel. This becomes evident when the block is removed after firing; the particle of grit is then prised out with a pointed rod, leaving a pock-mark on the brass surface. If the crater is small in comparison with the annular thickness of the ring this damage is of no great importance, but if it extends over a large proportion of the ring thickness the ring should be scrapped.

It will, of course, be appreciated that, as brass is a relatively soft material, an occasional sealing ring may suffer mechanical damage during the interval between its manufacture and use. In such cases it is necessary to exercise some discretion in deciding whether it may be safely used.

The various steps in preparing C.V.21 for firing a round are as follows. The interior of the vessel, comprising the chamber, sealing ring seatings and screw-threads are cleaned with rags, and the ring seatings are polished with metal polish and cotton wool on a stick, as mentioned previously.

The firing-block is thoroughly cleaned, and the release-valve spindle is removed for inspection of the seating and any necessary cleaning with the tool provided for this purpose (see Fig. 5). After cleaning, the valve spindle is replaced. During the firing of the previous round, some of the plastiecine filling the annular space between firing pin head and the firing pin adaptor, and the clearance between the sealing-ring and the block, had probably been affected by the propellant gases. It is necessary, then, to scrape away any contaminated or burnt plasticine and replace it with fresh material.

The ignition system is remade by soldering a length of fuse-wire across the ends of the two firing-pins, the gauge of wire depending on the type of ignition to be employed. For charge ignition by means of a combustible gas-mixture, No.50 S.W.G. (i.e. about 0.001-in. diameter) nichrome wire is used. The gas mixture commonly employed consists of ethylene to a pressure of about 20 cms. of mercury, with about 40 cms. of oxygen, and air up to atmospheric pressure. This is ignited by the discharge of a mains-charged condenser through the fuse-wire, and is sufficient to ignite, in turn, the hotter types of propellant. For the cooler propellants (e.g. those with adiabatic flame temperatures lower than about 2600 K) it is necessary to supplement this form of ignition with one gram of solid igniter (e.g. gun-powder or N.C.(Y)) spread over the propellant charge. In an alternative method of ignition, the fuse wire is of 30 S.W.G (i.e. 0.0124-ins. diameter) nichrome wire, and is threaded through a cambric bag containing approximately one gram of either gunpowder or N.C.(Y) powder. A 12 volt battery is used for fusing the wire. This system is sufficient for the hotter propellants, but for the cooler compositions an additional gram of powder is spread over the charge.

When very hot propellants are to be fired, the firing pins are protected from the propellant gases by covering them with a known amount of plasticine, for which the vessel volume is corrected.

Finally, that part of the sealing ring which protrudes from the firing block is cleaned with metal polish and cotton-wool, and the block is screwed into that end of the vessel where the liner has its greater external diameter. The joint is finally tightened by moderately-heavy hammering of the fixing spanner.

For electrical and thermal insulation of the tourmaline crystal during the burning of the charge, the annular space between the gauge electrode head and the adaptor is filled with mineral jelly up to the top of the earth cup, and this is covered with a pad of plasticine which fills the remainder of the recess in the block. Thus, the pad of plasticine provides thermal insulation and prevents the entry of products of propellant combustion which might otherwise degrade the insulation resistance of the gauge. In preparing the gauge-block for another firing the plasticine pad is removed and rejected, and any loss of mineral jelly is made good. The top cavity is refilled with fresh plasticine, and the insulation resistance is measured with a megger. With the type of instrument used, if this reading is less than infinity the gauge assembly is broken down, throughly cleaned, and then remade. If necessary, fresh plasticine is added to that already present in the annular recess between the sealing-ring and the block to bring its level up to that of the block end-face, the protruding portion of the ring is cleaned with metal polish and cotton wool, the exposed end of the ring is lightly smeared with plasticine, and the block is then ready for insertion into the vessel body.

The propellant charge is placed in the vessel chamber after the insertion of the firing block when the vessel temperature has been adjusted to 80°F by addition of hot or cold water, as necessary, to the water-bath. A further period is allowed to elapse before the gauge-block is inserted, in order to make good any heat lost by the charge during its transfer from the incubator to the vessel chamber. When it is judged that the charge temperature is steady at 80°F, the gauge block is fitted and lightly hammered home as in the case of the firing-block.

The scales graduated on the hexagonal heads of the two blocks are then read by reference to the fixed marks on the vessel ends in order to correct the vessel volume for the condition of the sealing rings. A ring spanner is fitted to the hexagonal portion of the release-valve spindle, and it is at this stage that the combustible gas mixture is introduced into the vessel through the release valve if gas ignition is to be used. It is then important to ensure that the release-valve is properly closed. A rope attached to the free end of a spanner passes round suitably positioned pulleys to the adjacent room, so that the valve may be opened at a safe distance to release the pressure in the vessel. The gauge leads are then connected to the terminals on the gauge block, and the last operation is to connect the firing leads to the terminals on the firing block. The operators then retire to the adjacent room, the sliding steel door connecting the two rooms is shut, and the vessel is then fired. After a few seconds pause the release valve is opened by pulling on the rope; the vessel is then broken down and prepared for the next round.

It is necessary to guard against premature firing of the vessel by having some positive means for ensuring that the firing circuit is broken whilst the firing room is occupied. The present firing-room has two steel doors, one of which is kept permanently locked and the other, of the sliding type, communicates with a workshop. It is from the workshop that the vessel is fired and the gases released from the vessel. The lead from the firing battery or condenser passes to the firing panel fixed on the workshop wall near the communicating door. In addition to the firing switch, this panel is fitted with an isolating switch which lights up an indicating lamp when closed. From the firing panel the firing circuit is continued through a cable passing across the door opening, at about chest height, then through a hole in the wall to the vessel. This cable is not continuous, but is broken at one side of the door opening and connected by a plug and socket arrangement. The firing cable stretched across the door opening provides a reminder that entry to the firing room is forbidden until the firing circuit is broken by withdrawing the plug, and this connection must not be remade while the firing-room is occupied and while the communicating door is open.

Assuming that the remainder of the drill has been carried out (i.e. that the vessel has been loaded, the firing room has been evacuated and the communicating door closed), the sequence of events is that the plug and socket connection in the firing lead is made, and the isolating switch on the firing panel is turned on, illuminating the indicating lamp, which signifies that depression of the firing switch will now fire the vessel. The firing switch has a return spring which breaks the firing circuit and keeps it broken after the firing switch has been operated. After firing and release of the gas from the vessel, the isolating switch is turned off, the plug-socket connection is broken to permit entry to the firing-room, and the vessel is dismantled for cleaning and preparation for the next round.

4. The measurement of vessel volume

The vessel volume must be measured to a higher degree of accuracy than that required in the estimation of propellant force constant, which is susceptible to certain additional errors.

For several years the standard method of measuring the chamber volume was to measure the quantity of water required to fill it. This method was, in fact, still in use when the C.V. 21 design first came into use. In order to discourage the formation of air-bubbles in the water filling the vessels, a known weight of plasticine was first pressed into the corners between the end-faces of the blocks and the inner surfaces of the sealing rings. For this purpose the fuse-wire was not fitted and the gauge electrode and insulating sleeve were omitted from the gauge-block. Plasticine was used to streamline the gauge-boring in order to avoid air-bubble formation. In other respects the blocks were prepared as for firing.

With only the firing block fitted to the vessel, which was then up-ended so that it rested on the firing block, a measured amount of water was then poured into the chamber to a level just short of the upper sealing-ring seating. The gauge block was then screwed into the vessel, and more water was poured in, through the gauge boring, up to the external end of the block. The amount of water required to fill the vessel chamber and gauge block was, of course, determined by commencing with a weighed amount of water known to be more than sufficient for this purpose, and subtracting the amount left over. It was then necessary to make corrections for the volume of the gauge boring and the plasticine used for streamlining purposes. As a refinement, this method was modified by plugging the release channel at its chamber end and applying a correction for its volume because of the strong possibility of air becoming trapped in this narrow channel.

With due precautions being taken against the formation of air-bubbles the water method of volume measurement was found to give results reproducible to within about 2 c.c.s. This method, however, is somewhat cumbersome, and requires that the vessel be removed from its water-jacket. Accordingly, a method capable of being applied to the vessel in situ was sought.

Some consideration was given to a method using air as the measuring medium and a vessel of accurately known volume as a standard reference. The necessity for perfect air-tightness, uniformity and constancy of air-temperature and accuracy of partial-pressure measurement were some of the difficulties which led to early abandonment of this method.

In the present case, as the chamber is of regular shape, the most satisfactory method of volume measurement is that of direct measurement of dimensions, which can be carried out with the vessel set up for firing. The bore of the vessel is first thoroughly cleaned with emery cloth wrapped round a cylindrical holder of such size that it is a fairly good fit in the chamber.

The bore diameter is measured at intervals of about one inch along its length by means of a standard type of cylinder measuring gauge. The measuring head of the gauge is fitted with a fixed anvil at one end and a spring-loaded plunger in the other, and is connected, T-fashion, to the tubular handle. A clock gauge, graduated in thousanths of an inch, is attached to the end of the handle remote from the measuring head, and is connected by a lever passing through the hollow handle to the spring-loaded plunger in such a manner that movement of the plunger is indicated by the clock gauge. In use, the spring compels the plunger to take up such a position that the overall distance between plunger and anvil corresponds to the diameter of the cylinder being measured. The reading of the dial gauge is noted, and the instrument is then standardised by reference to a ring gauge. In the present application a ring gauge three inches in diameter (i.e. the nominal bore diameter of the vessel) is used for setting the zero of the instrument, which then reads in terms of differences from this dimension.

For the measurement of chamber length the special instrument shown in Fig.8 is employed. This consists of a length measuring gauge supported in the vessel chamber on a jig, to which it is secured by V-grooves and a locking screw. The gauge consists essentially of a rod bored out at one end to receive a spring loaded plunger, and threaded externally at this same end to fit a knurled nut, rotation of which operates on a taper to adjust the frictional grip between rod and plunger.

As the gauge boring is axial, the measurement of chamber length has to be made off the centre-line. The firing block is first inserted into the vessel, and the knurled nut on the gauge is adjusted so that the grip between plunger and rod is sufficient to retain the plunger in any axial position to which it is pushed. With the plunger protruding to its fullest extent, the gauge and jig are then placed in the vessel chamber, with the plunger at the gauge block end. Care must be taken to ensure that the jig is in correct alignment for the protruding part of the insulated firing-pin to pass through a hole provided for this purpose in one end of the jig. Also, the solid end of the gauge must be pushed firmly against the face of the firing-block. The gauge block is then inserted into the vessel, and over the final part of its travel forces the plunger back into its housing but remains in contact with its end. The previously-mentioned graduated scales on the vessel blocks are then read, as during firing; the gauge block is removed, leaving the gauge plunger in the position to which it was pushed by the gauge block, and the gauge and jig are removed from the vessel. The knurled nut is further tightened to increase the grip on the plunger, and the overall length of the gauge, which is of course, the length of the chamber, is measured with a vernier caliper.

It will be observed from Fig. 8 that one of the flanges of the jig is drilled in three places to provide clearance for the protruding portion of the insulated firing-electrode. Thus, it is possible to measure the chamber length at three positions spaced 120° apart.

The volume calculated from the chamber diameter and length measurements is adjusted to allow for the calculated volumes of the two firing pins and the channel leading from the firing block face to the release-valve seating. From the result is subtracted the sum of the scale readings at the external ends of the two blocks giving V, the volume of the vessel with the blocks screwed in to the zeros of the scales. Thus, in any particular firing, the vessel volume is V plus the sum of the two block readings.

If the error in measuring chamber length and diameter is 0.001 inch, then the maximum error in the original assessment of volume is 0.08%. The scales on the blocks are read to the nearest 1/2 c.c., and this may account for an error in V of 1/2 c.c., or 0.07%. In any particular firing, an additional error of this same magnitude may occur when the scales are again read, and in the worst possible circumstances, therefore, the estimated vessel volume may be in error by 0.22%.

5. Further developments

Detailed discussion of the various factors contributing to the overall error of the Closed Vessel technique is beyond the scope of the present report, but it is necessary to give such matters some consideration in Closed Vessel design and development. Also, the purpose for which the vessel is required will impose some limit to the amount of error which can be tolerated. In the investigation of a suspected large propellant abnormality, for example, an accuracy of 1 or 2 per cent. might be sufficient, but in the other extreme, viz. that of propellant proof, which is one of the present objectives, the accuracy requirement is very stringent. Also, the choice of theoretical method will have some bearing on the relative importance of the various contributions to the total error.

It is necessary here to consider only the most exacting requirement, viz. that of propellant proof, for which there is a choice of two methods. In the first, firings of the unknown propellant are alternated with firings of a standard lot of the same nominal composition and shape, and of approximately the same size, and the results are expressed in terms of force and either quickness or vivacity of the unknown propellant, relative to the standard. This method has the advantage that the vessel volume and gauge sensitivity do not require to be known, but, in common with the present method of propellant proof in the gun, an important disadvantage is that reliance must be placed on the constancy of the ballistic characteristics of the propellant standard.

In the alternative scheme, the method of analysis is such that the force constant and rate of burning law for the propellant under test are determined in absolute units, and reference to a standard is unnecessary. For this to be done, however, the vessel volume and gauge sensitivity must be known to an appropriately high degree of accuracy. Thus, other things being equal, reliance is transferred from the constancy of a standard propellant to the accuracy of measurement of vessel volume and gauge sensitivity. It is well known that difficulties sometimes arise due to suspected changes in the ballistic characteristics of propellant standards, and for this reason the second method is preferred to the first in the A.R.E., but there is, as yet, insufficient evidence on which to judge whether or not the second method is, in fact, superior to the first. With the second method it is, of course, necessary to reduce to a minimum the error in the measurement of vessel volume, and on these grounds alone it would probably be desirable to increase the capacity.

With the present set-up of Closed Vessel and recording equipment, the major contribution to the total error is due, in some cases, to lack of homogeneity in the propellant. A propellant lot is necessarily made up from a number of different pressings, which may differ slightly in composition and size. Thus, the size of the propellant sample fired in the Closed Vessel must be such that the error due to variations within the propellant is of reasonable magnitude. If the manufacture is very inferior, the size of such a sample may necessitate the firing of an inconveniently large number of rounds, in which case an increase in chamber capacity would be desirable on grounds of economy in the number of rounds.

In general, then, the line of development will probably be towards increase in chamber capacity, but the safety aspect will have to be kept in mind. Improvement in propellant manufacture would, however, reduce the emphasis on this point. A more widespread use of the Closed Vessel method might be of some considerable assistance in improving propellant homogeneity.

6. Acknowledgment

Much of the information contained in the historical survey of Closed Vessel development in the A.R.E. was supplied by Mrs. Pope, Weapons Research Division Registrar.

7. Bibliography

(1) Sir Andrew Noble. "Artillery and Explosives". Published by John Murray, London, 1906.

(2) H.A. Flint "The development of a Closed Vessel Piezo-Electric recording equipment". A.R.E. Report No. 18/50.

(3) H.H.M. Pike "The Conversion of data from Closed Vessel firings for use in simplified ballistic calculations". A.R.D. Ballistics Report No. 64/42.

CONFIDENTIAL

Ministry of Supply

ARMAMENT RESEARCH ESTABLISHMENT

MEMO. NO.15/50

(Weapons Research Memo. No.7/50)

The design of a Closed Vessel (No.21) for routine examination of propellants for guns

H.A.Flint

Summary

A short note on the type of propellant information obtainable from the Closed Vessel technique is followed by a survey of the various vessel designs used in the A.R.E. since about 1895.

The various factors taken into consideration in the design of a vessel (No.21) for routine examination of ordnance propellants, and various modifications which operating experience showed to be desirable, are dealt with next, followed by an account of the method employed for measuring the chamber volume.

In general, this design of vessel has been found tp be satisfactory for the required purpose, and no further modifications are anticipated at the present time.

CONFIDENTIAL

Ministry of Supply

ARMAMENT RESEARCH ESTABLISHMENT

MEMO. NO.15/50

(Weapons Research Memo. No.7/50)

The design of a Closed Vessel (No.21) for routine examination of propellants for guns

H.A.Flint

Summary

A short note on the type of propellant information obtainable from the Closed Vessel technique is followed by a survey of the various vessel designs used in the A.R.E. since about 1895.

The various factors taken into consideration in the design of a vessel (No.21) for routine examination of ordnance propellants, and various modifications which operating experience showed to be desirable, are dealt with next, followed by an account of the method employed for measuring the chamber volume.

In general, this design of vessel has been found to be satisfactory for the required purpose, and no further modifications are anticipated at the present time.

CONFIDENTIAL

Ministry of Supply

ARMAMENT RESEARCH ESTABLISHMENT

MEMO. NO.15/50

(Weapons Research Memo. No.7/50)

The design of a Closed Vessel (No.21) for routine examination of propellants for guns

H.A.Flint

Summary

A short note on the type of propellant information obtainable from the Closed Vessel technique is followed by a survey of the various vessel designs used in the A.R.E. since about 1895.

The various factors taken into consideration in the design of a vessel (No.21) for routine examination of ordnance propellants, and various modifications which operating experience showed to be desirable, are dealt with next, followed by an account of the method employed for measuring the chamber volume.

In general, this design of vessel has been found tp be satisfactory for the required purpose, and no further modifications are anticipated at the present time.

CONFIDENTIAL

Ministry of Supply

ARMAMENT RESEARCH ESTABLISHMENT

MEMO. NO.15/50

(Weapons Research Memo. No.7/50)

The design of a Closed Vessel (No.21) for routine examination of propellants for guns

H.A.Flint

Summary

A short note on the type of propellant information obtainable from the Closed Vessel technique is followed by a survey of the various vessel designs used in the A.R.E. since about 1895.

The various factors taken into consideration in the design of a vessel (No.21) for routine examination of ordnance propellants, and various modifications which operating experience showed to be desirable, are dealt with next, followed by an account of the method employed for measuring the chamber volume.

In general, this design of vessel has been found to be satisfactory for the required purpose, and no further modifications are anticipated at the present time.

FIG. 1.

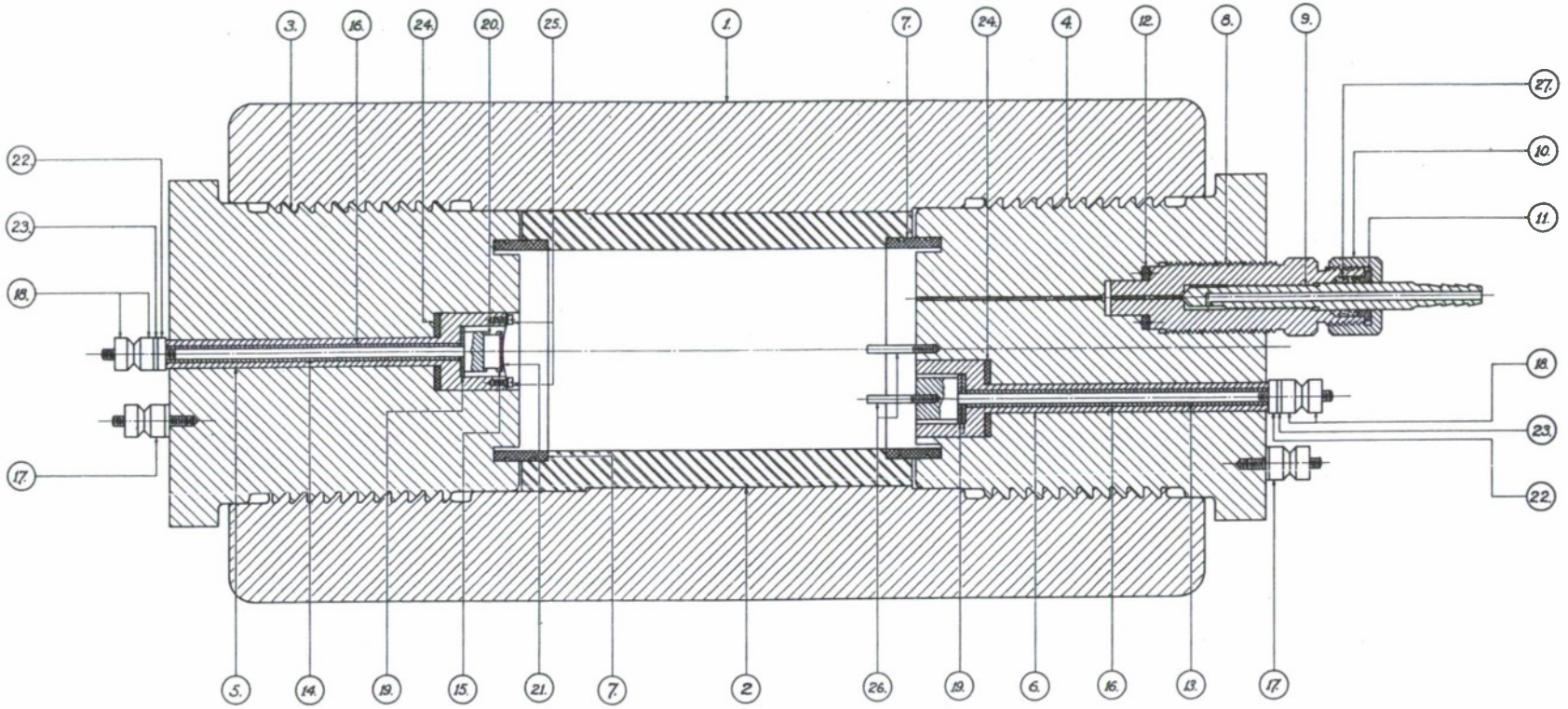

DETAIL No.	DESCRIPTION.	No. PER SET.	MATERIAL.
1.	VESSEL BODY.	1.	B.S. AUTO. 5005/401 (OR EQUIVALENT).
2.	LINER.	1.	VIBRAC. 30 (OR EQUIVALENT).
3.	GAUGE-BLOCK.	1.	B.S. AUTO. 5005/401 (OR EQUIVALENT).
4.	FIRING-BLOCK.	1.	〃 〃
5.	GAUGE-ELECTRODE BUSH	1.	MILD STEEL.
6.	FIRING-ELECTRODE BUSH.	1.	〃 〃
7.	SEALING RING	2.	BRASS.
8.	RELEASE-VALVE BODY.	1.	B.S. AUTO. 5005/401 (OR EQUIVALENT).
9.	VALVE SPINDLE.	1.	CARBON TOOL-STEEL.
10.	GLAND NUT.	1.	MILD STEEL.
11.	GLAND COLLAR.	1.	〃 〃
12.	RELEASE-VALVE SEALING-WASHER.	1.	COPPER.
13.	FIRING ELECTRODE.	1.	MILD STEEL.
14.	GAUGE ELECTRODE.	1.	〃 〃
15.	EARTH-CAP.	1.	BRASS.
16.	ELECTRODE INSULATING-SLEEVE.	2.	EBONITE, TUFNOL, OR SIMILAR INSULATING MATERIAL.
17.	STANDARD No. 4 B.A. TERMINAL.	2.	BRASS.
18.	STANDARD No. 4 B.A. TERMINAL NUTS.	4.	BRASS.
19.	ELECTRODE INSULATING WASHER.	3.	MICA.
20.	PIEZO-ELECTRIC CRYSTAL.	1.	TOURMALINE.
21.	CRYSTAL RETAINING SPRING.	1.	SPRING STEEL.
22.	INSULATING WASHER.	2.	EBONITE, TUFNOL, OR SIMILAR INSULATING MATERIAL.
23.	STANDARD No. 6 B.A. WASHER.	2.	BRASS.
24.	ELECTRODE ADAPTER SEALING WASHER.	2.	COPPER.
25.	STANDARD No. 6 B.A. CHEESE-HEAD SCREW.	2.	MILD STEEL.
26.	FIRING-POLE.	2.	〃 〃
27.	VALVE-PACKING.		ASBESTOS-TALLOW MIXTURE.

CONFIDENTIAL.

— CLOSED VESSEL No. 21. —

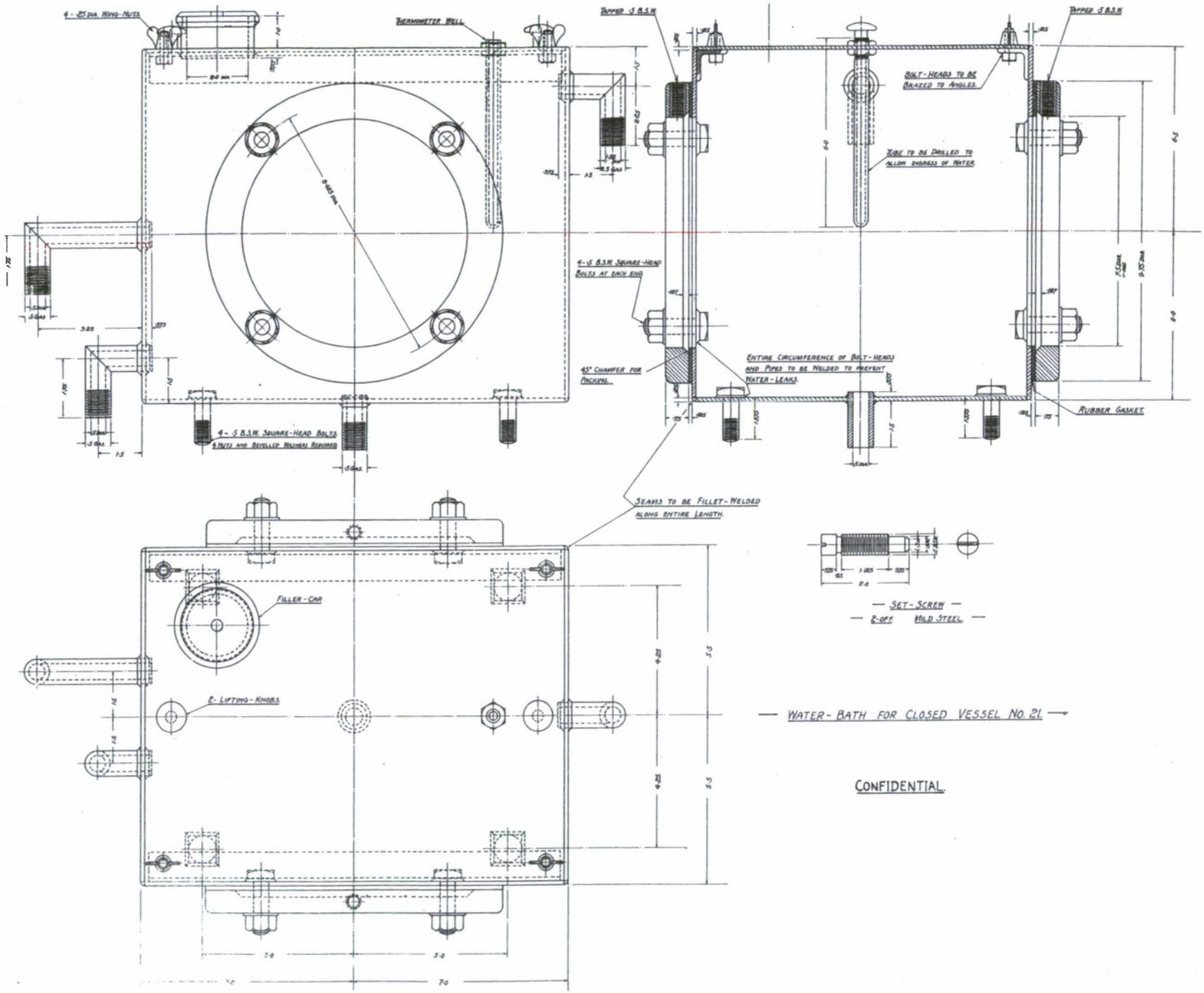

WATER-BATH FOR CLOSED VESSEL NO. 21.

CONFIDENTIAL.

FIG. 3.

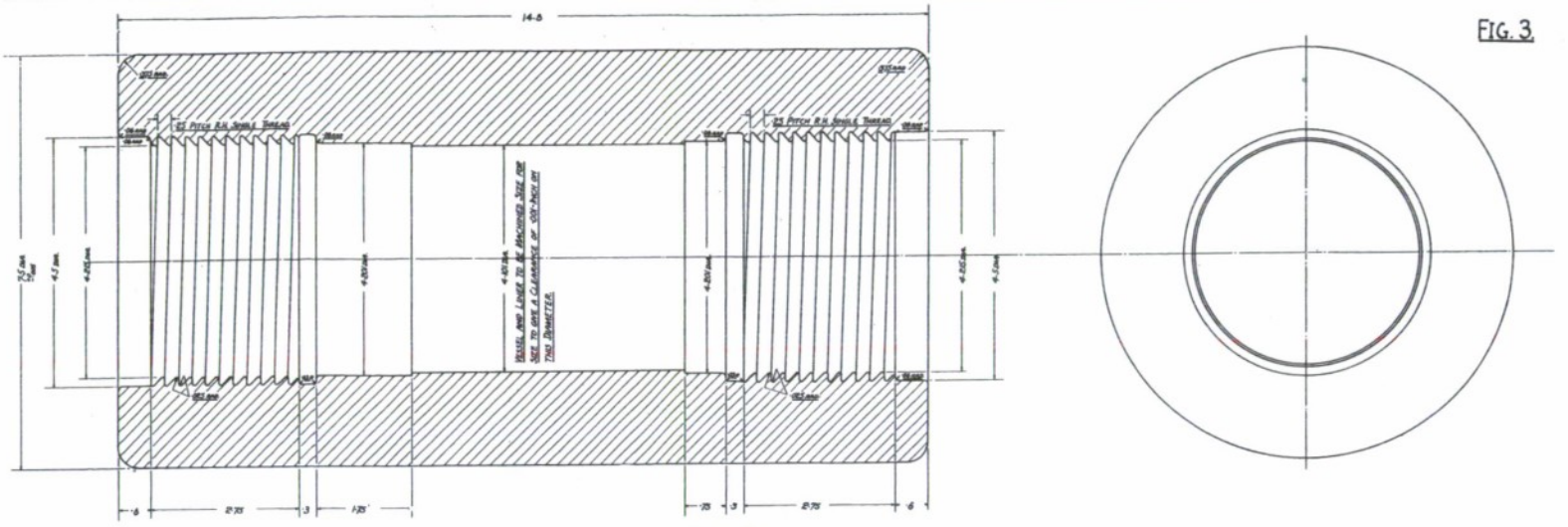

— VESSEL BODY —

— 1-OFF. B.S. AUTO. 5005/401 (OR EQUIVALENT) HEAT-TREATED TO 45 TONS/SQ. IN. YIELD. —

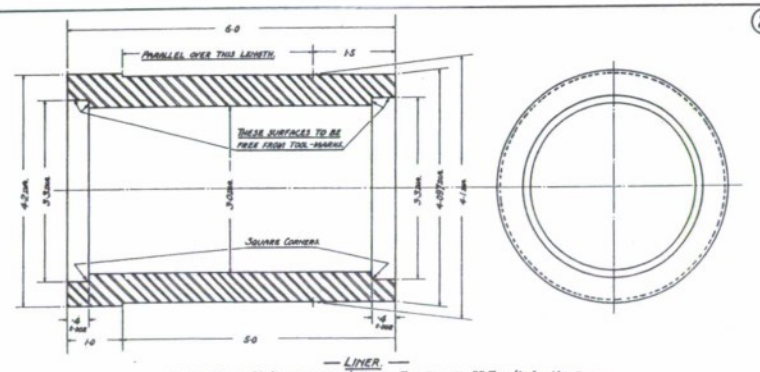

— LINER —

— 1-OFF. VIBRAC 30 (OR EQUIVALENT) HEAT-TREATED TO 55 TONS/SQ. IN. YIELD. —

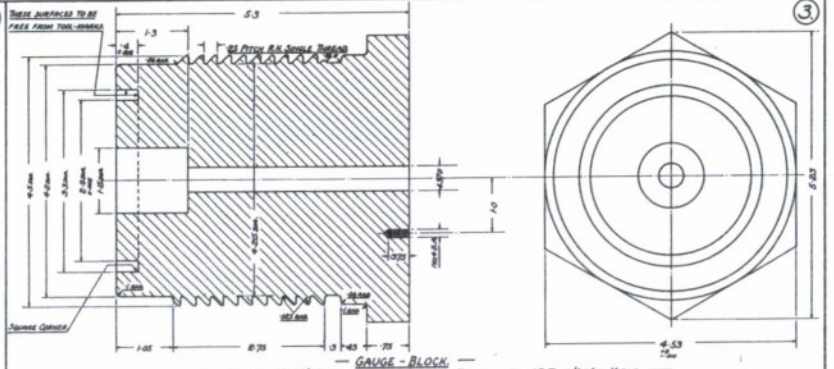

— GAUGE - BLOCK —

— 1-OFF. B.S. AUTO. 5005/401 (OR EQUIVALENT) HEAT-TREATED TO 45 TONS/SQ. IN. YIELD. —

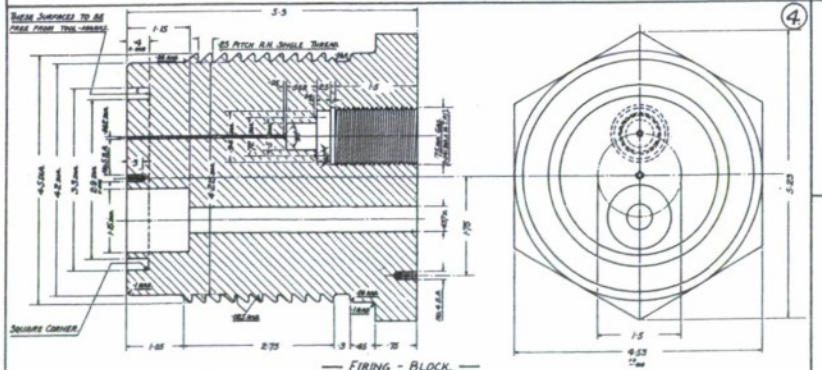

— FIRING - BLOCK —

— 1-OFF. B.S. AUTO. 5005/401 (OR EQUIVALENT) HEAT-TREATED TO 45 TONS/SQ. IN. YIELD. —

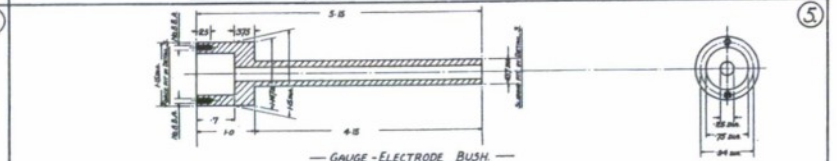

— GAUGE - ELECTRODE BUSH —

— 1-OFF. MILD STEEL —

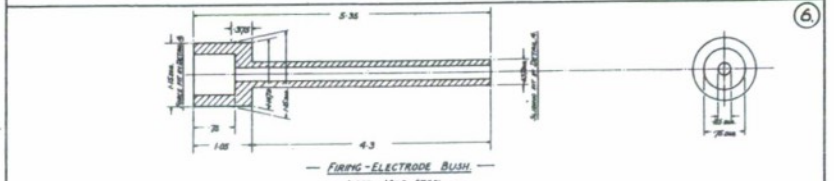

— FIRING - ELECTRODE BUSH —

— 1-OFF. MILD STEEL —

— CLOSED VESSEL NO 21 —

CONFIDENTIAL

FIG. 4

(7)

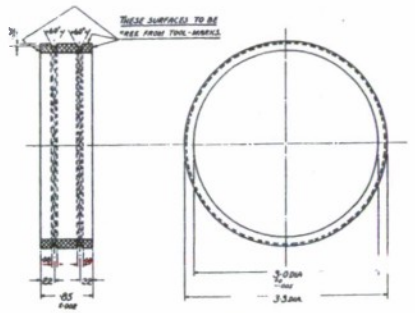

— SEALING RING. —
— 2-OFF. BRASS. —

(8)

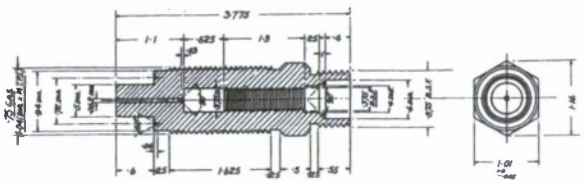

— RELEASE-VALVE BODY. —
— 1-OFF. B.S. AUTO. 300S/401 (OR EQUIVALENT) HEAT-TREATED TO 45 TONS/SQ IN. YIELD —

(9)

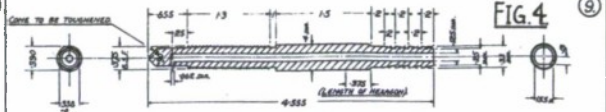

— VALVE-SPINDLE —
— 1-OFF. CARBON BOIL STEEL —

(10)

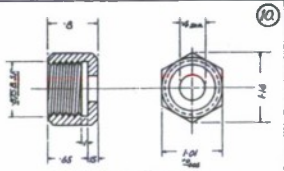

— GLAND NUT. —
— 1-OFF. MILD STEEL —

(11)

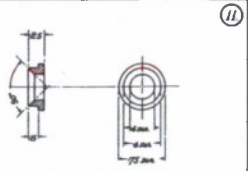

— GLAND COLLAR —
— 1-OFF. MILD STEEL —

(12)

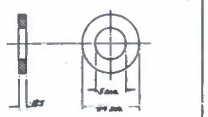

— RELEASE-VALVE SEALING-WASHER. —
— 1-OFF. COPPER. —

(13)

— FIRING-ELECTRODE —
— 1-OFF. MILD STEEL. —

(14)

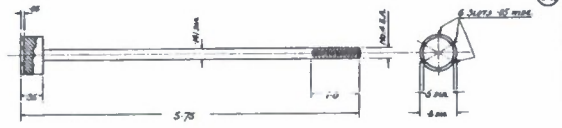

— GAUGE-ELECTRODE. —
— 1-OFF. MILD STEEL. —

(15)

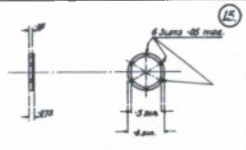

— EARTH-CAP —
— 1-OFF. BRASS —

(16)

— ELECTRODE INSULATING-SLEEVE. —
— 2-OFF. EBONITE, TUFNOL, OR SIMILAR INSULATING MATERIAL. —

(17)

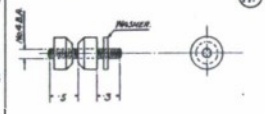

— STANDARD NO. 4 B.A. TERMINAL. —
— 2-OFF. BRASS. —

(18)

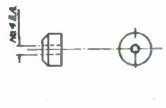

— STANDARD NO. 4 B.A. TERMINAL NUT. —
— 4-OFF. BRASS. —

(19)

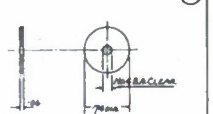

— ELECTRODE INSULATING-WASHER —
— 3-OFF. MICA. —

(20)

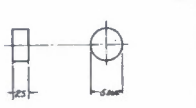

— PIEZO-ELECTRIC CRYSTAL —
— 1-OFF. TOURMALINE —

(21)

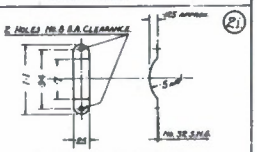

— CRYSTAL RETAINING-SPRING. —
— 1-OFF. SPRING STEEL —

(22)

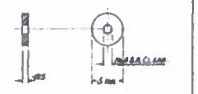

— INSULATING WASHER. —
— 2-OFF. EBONITE, TUFNOL, OR SIMILAR MATERIAL. —

(23)

— STANDARD No. 4 B.A. WASHER. —
— 2-OFF. BRASS. —

(24)

— ELECTRODE ADAPTER SEALING-WASHER —
— 2-OFX. COPPER. —

(25)

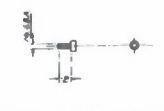

— STANDARD No. 8 B.A. CHEESE-HEAD SCREW. —
— 2-OFF. MILD STEEL. —

(26)

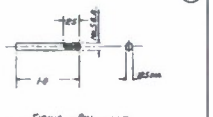

— FIRING-PIN —
— 2-OFF. MILD STEEL. —

TOLERANCES ALLOWED EXCEPT WHERE OTHERWISE STATED:-
(a) ON DIAMETERS (a) UP TO 1-INCH, -.001-INCH ON THE MALE DIAMETER.
+.001-INCH ON THE FEMALE DIAMETER.
(a) OVER 1-INCH, -.002-INCH ON THE MALE DIAMETER
+.002-INCH ON THE FEMALE DIAMETER.
(b) ON LENGTHS, ±.01-INCH

— CLOSED VESSEL NO. 21 —

CONFIDENTIAL.

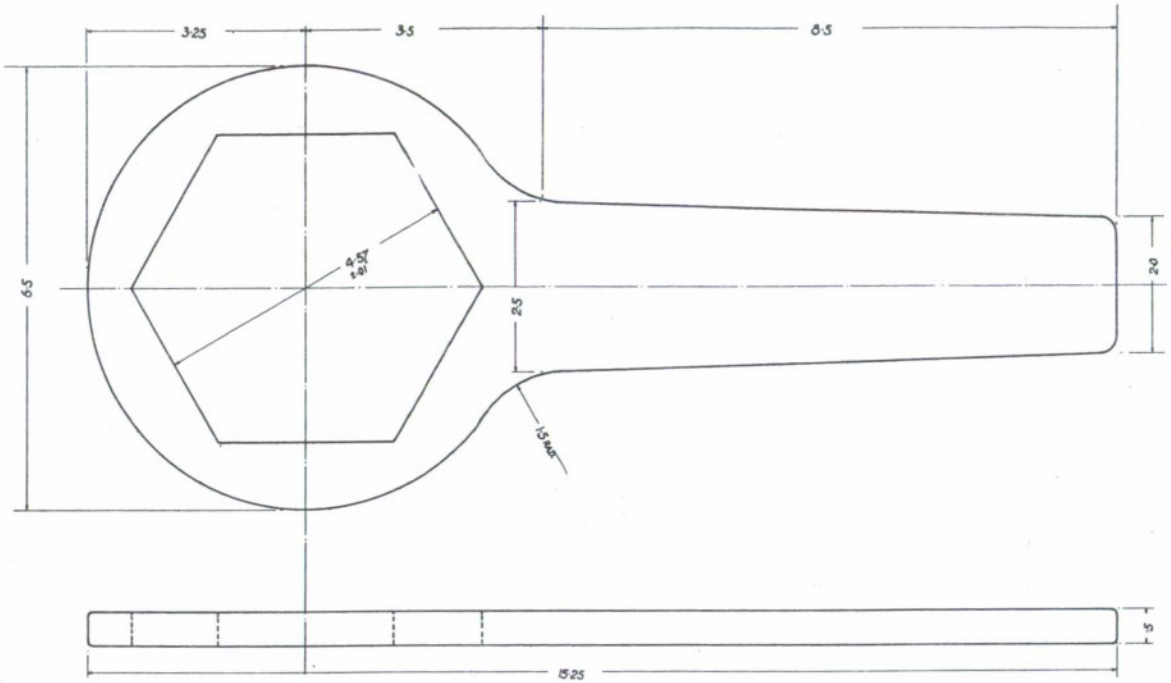

(32) 1-OFF MILD STEEL.
— TO FIT DETAILS 2 & 14 OF A.R.D/C. 383 —

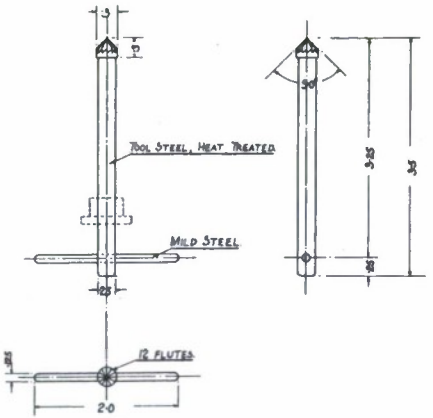

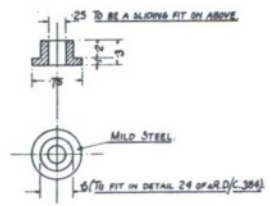

(34) VALVE-SEATING CLEANING-TOOL.
— 1-OFF. MATERIALS AS ABOVE —

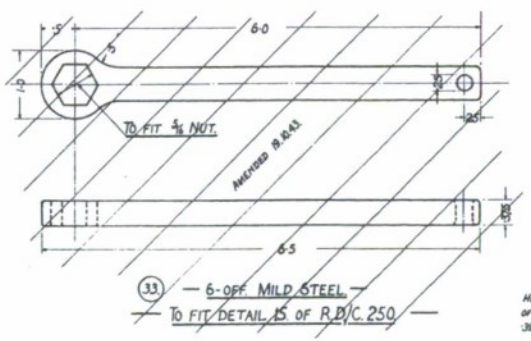

(33) — 6-OFF MILD STEEL —
— TO FIT DETAIL 15 OF R.D/C. 250 —

— FURTHER ITEMS FOR C.V.S. 21 —

CONFIDENTIAL.

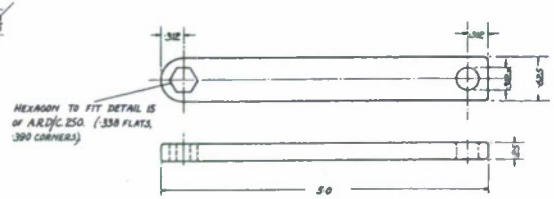

(35) 1-OFF MILD STEEL.

FIG. 6.

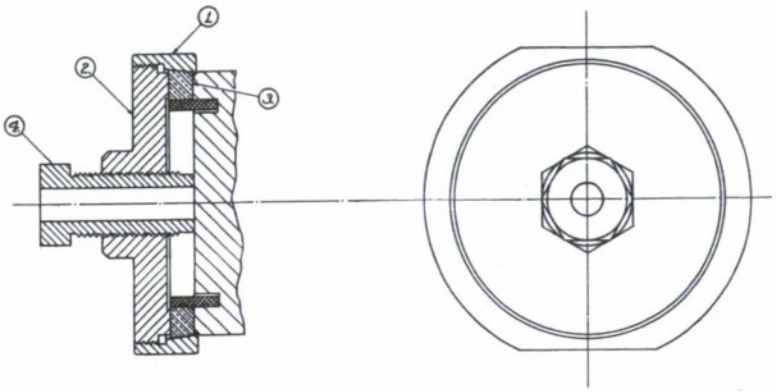

— ASSEMBLY —

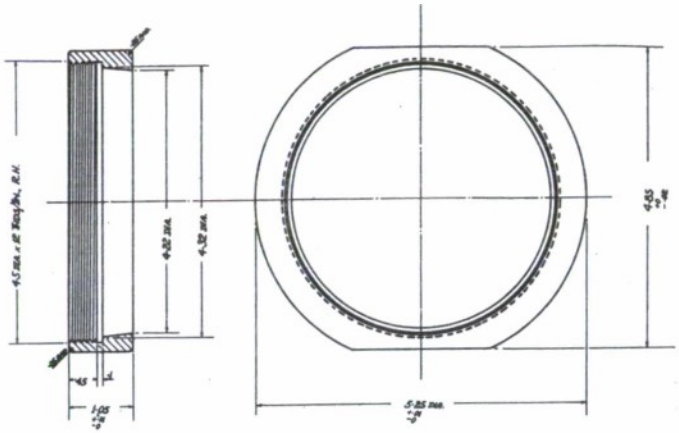

— (1) 1-OFF MILD STEEL —

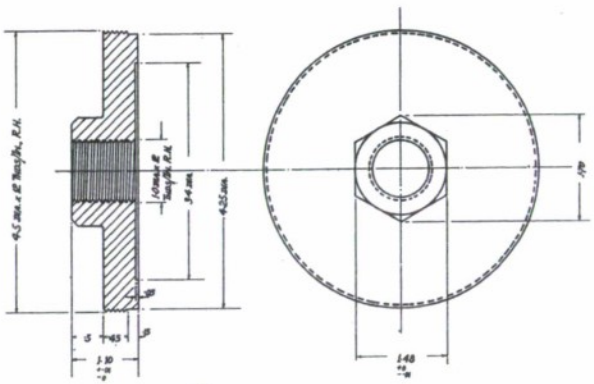

— (2) 1-OFF MILD STEEL —

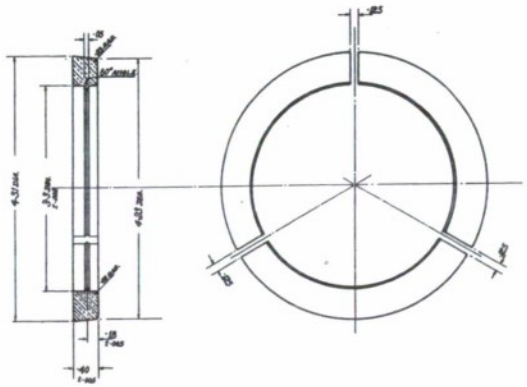

— (3) 1-OFF MILD STEEL —

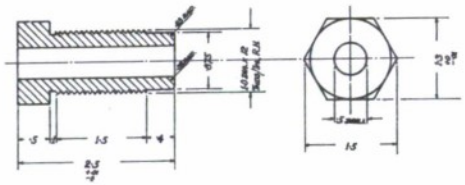

— (4) 1-OFF MILD STEEL —

— CLOSED VESSEL NO. 21 —

— TOOL FOR EXTRACTING OBTURATING-RINGS —

CONFIDENTIAL

FIG. 7.

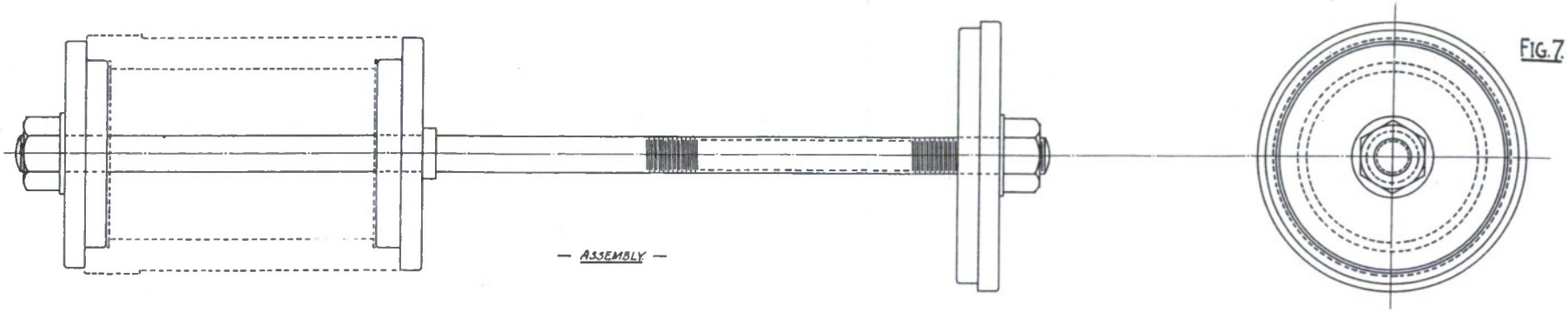

— ASSEMBLY —

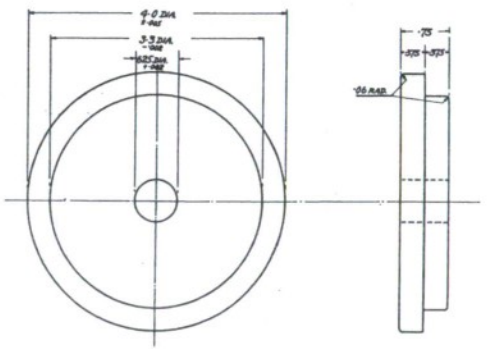

— 1-OFF. MILD STEEL —

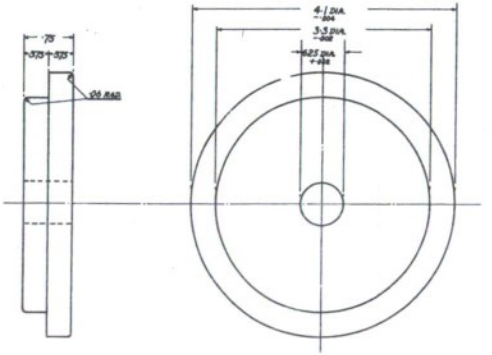

— 1-OFF. MILD STEEL —

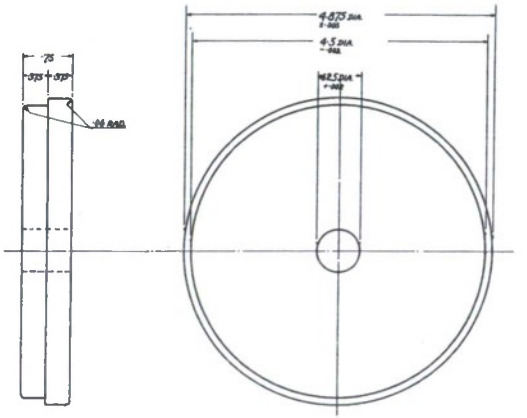

— 1-OFF. MILD STEEL —

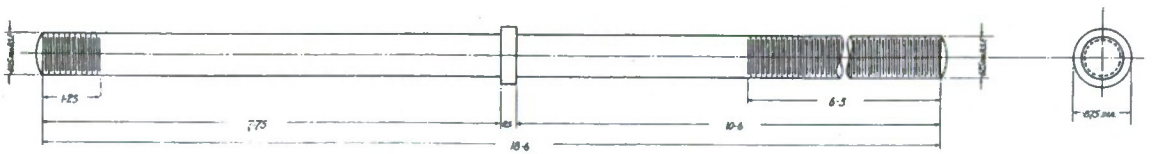

— CLOSED VESSEL NO. 21 —

CONFIDENTIAL

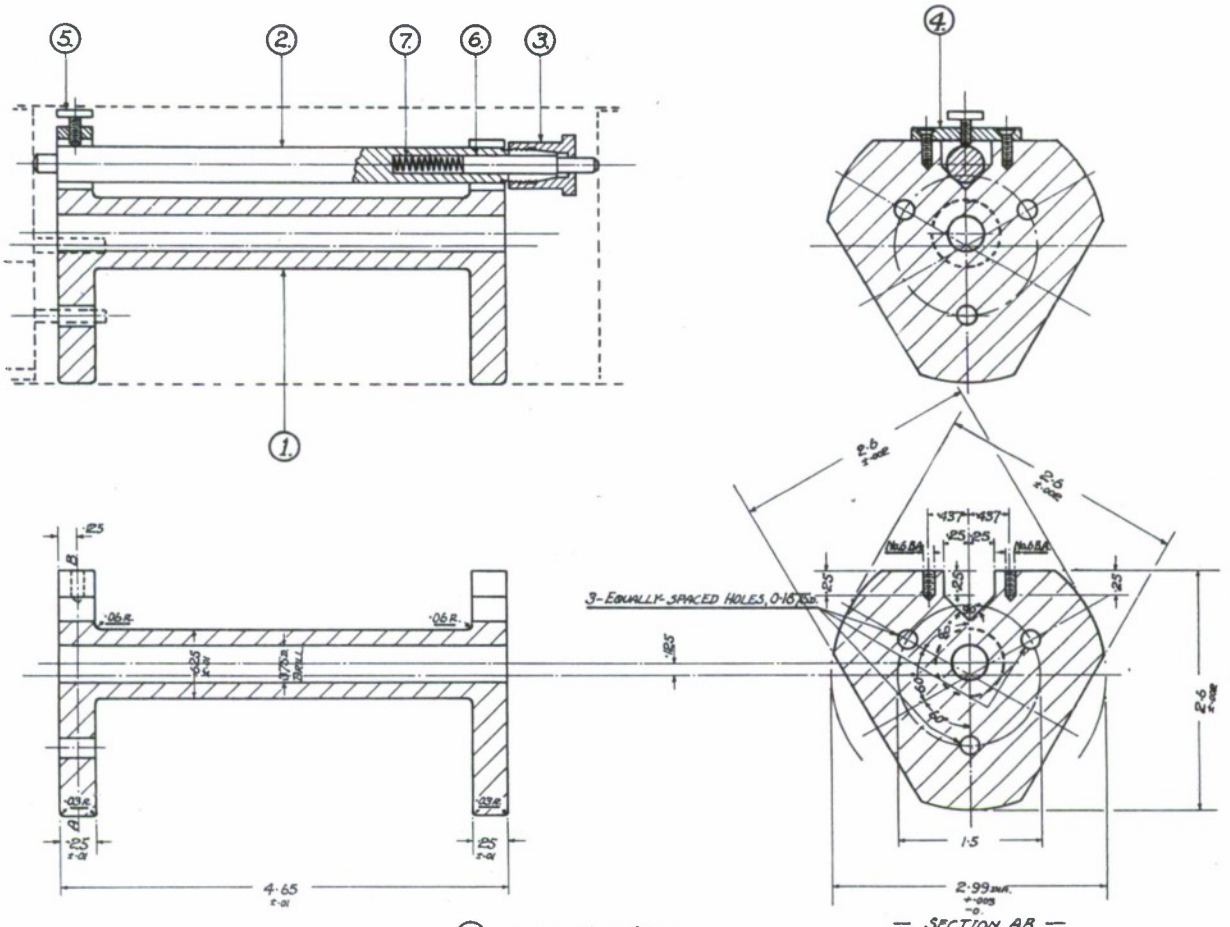

— (1.) 1-OFF. MILD STEEL. —

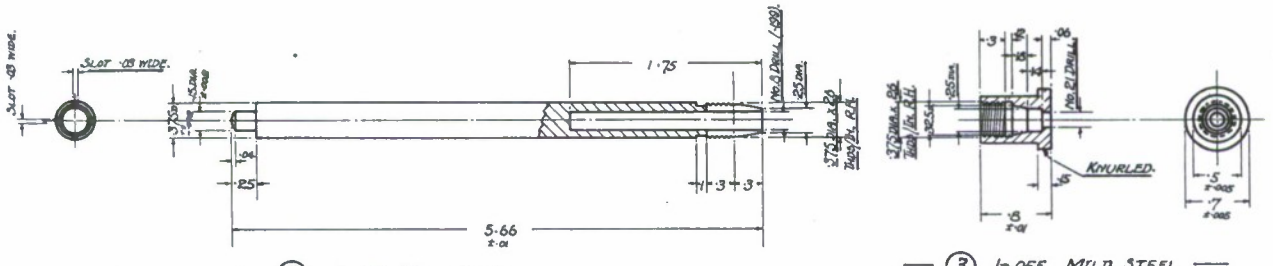

— (2.) 1-OFF. MILD STEEL. —

— (3.) 1-OFF. MILD STEEL —

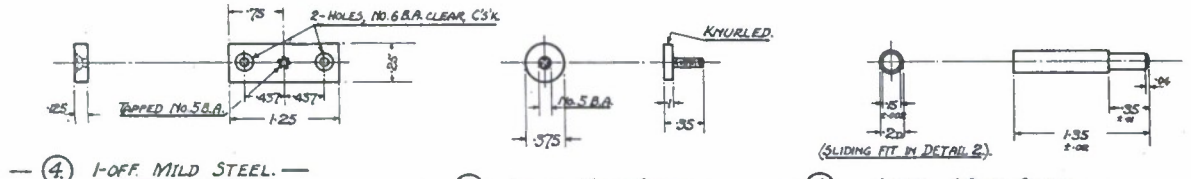

— (4.) 1-OFF. MILD STEEL. — — (5.) 1-OFF. MILD STEEL. — — (6.) 1-OFF. MILD STEEL —

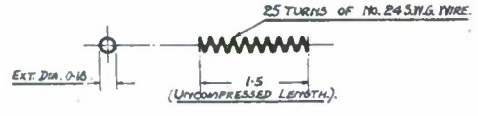

— (7.) 1-OFF. PIANO WIRE. —

— CLOSED VESSEL No 21. —

— TOOL FOR MEASURING CHAMBER LENGTH. —

FIG. 8.

[dstl]

Information Centre
Knowledge Services
[dstl] Porton Down
Salisbury
Wilts
SP4 0JQ
Tel: 01980-613753
Fax 01980-613970

Defense Technical Information Center (DTIC)
8725 John J. Kingman Road, Suit 0944
Fort Belvoir, VA 22060-6218
U.S.A.

AD#:
Date of Search: 16 February 2007

Record Summary:

Title: Design of closed vessel (No 21) for routine examination of propellants for guns
Covering dates 1950
Availability Open Document, Open Description, Normal Closure before FOI Act: 30 years
Former reference (Department) Memo No 15/50
Held by The National Archives, Kew

This document is now available at the National Archives, Kew, Surrey, United Kingdom.

DTIC has checked the National Archives Catalogue website (http://www.nationalarchives.gov.uk) and found the document is available and releasable to the public.

Access to UK public records is governed by statute, namely the Public Records Act, 1958, and the Public Records Act, 1967.
The document has been released under the 30 year rule.
(The vast majority of records selected for permanent preservation are made available to the public when they are 30 years old. This is commonly referred to as the 30 year rule and was established by the Public Records Act of 1967).

This document may be treated as UNLIMITED.